Alle Rechte vorbehalten/ All rights reserved

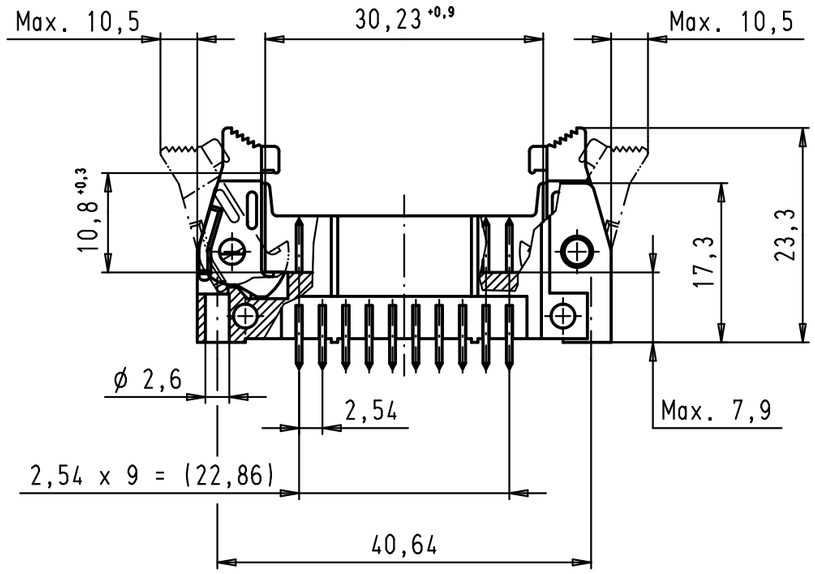

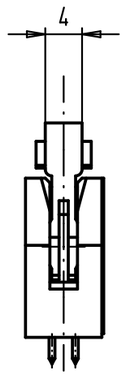

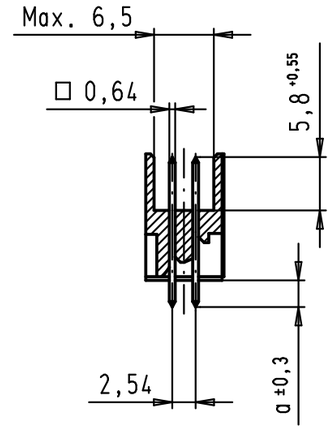

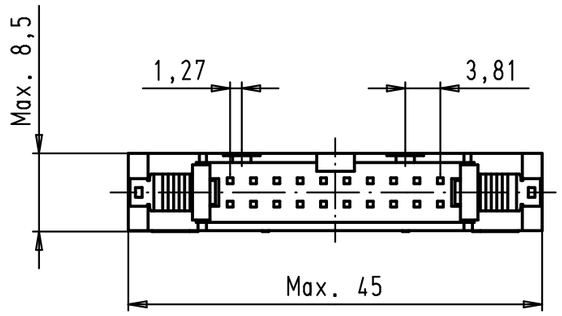

PCB layout, component side

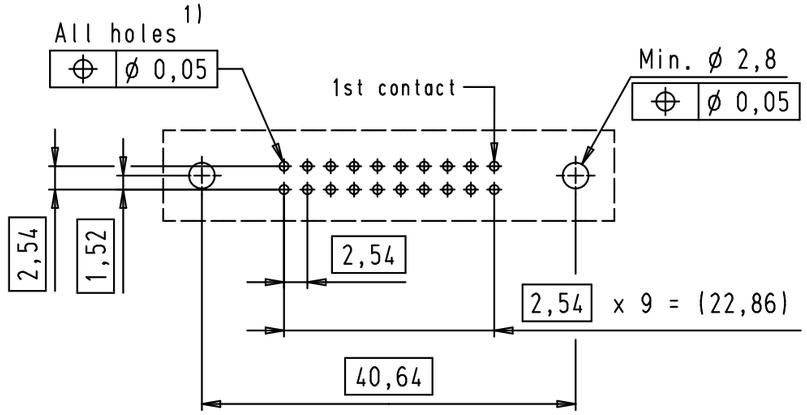

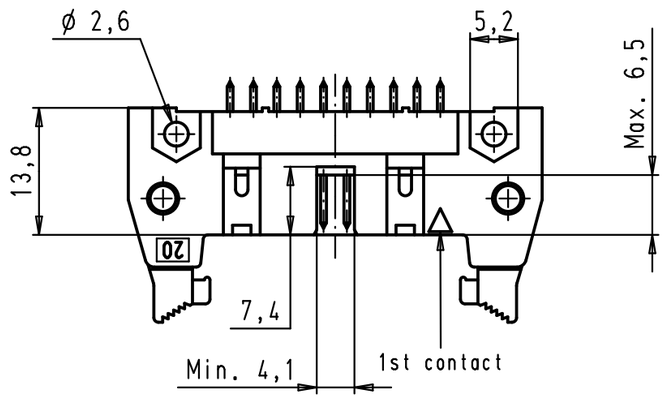

1) Solder pins for PCB connections
ø1±0,1 according to IEC 60 326-3

09 18 520 7912	3	4,5
09 18 520 6912	2	4,5
09 18 520 5912	0,76 µm Au	4,5
09 18 520 7914	3	2,9
09 18 520 6914	2	2,9
09 18 520 5914	0,76 µm Au	2,9
Part number	Performance level	a

				Dat.	Name
			Detail.	01/12/99	JB
			Insp.		
34900	29/01/08	LP	Stand.		
27931	15/06/00	JB			
26554	01/12/99	JB			
Mod.	Dat.	Name			

All Dim. in mm
Orig. Size DIN A 3

SEK 18 Male Connector Standard
20 poles
Straight solder pins
Short locking levers

Maßstab/ Scale: 1,5:1

HARTING EURL
F-95972 Paris

TB 09 18 520 X91X

Sub.

Blatt/ Page 1/2